LTSYS

SW-100-24-U2L

Triac/ELV 0-10V

Intelligent Tunable White LED Driver (Constant Voltage)

- Metal casing design, natural air cooling;
- NFC enables modification of power parameters to facilitate driver data exchange functionality;
- 6 in 1 DIM：0-10V，1-10V，10VPWM，RX，Traic，ELV；
- Waterproof rating IP67, suitable for UL, dry, humid, and rain-exposed environments;
- Lightning Protection: Differential mode 6KV, Common mode 10KV；
- Dimming range: 0–100%, LED dimming starts at 0.01%;
- Complies with Type HL and is suitable for use in North American Class 1, Division 2 locations such as gas stations, chemical plants, and wastewater treatment facilities;
- Certified to UL Class 2 and Class P standards;
- Compliant with IEEE 1789 and UL 8750 standards;
- Comprehensive Protection: Over-temperature protection, over-voltage protection, overload protection, short-circuit protection;
- When the signal is floating, it outputs at full load and can be used as a power supply.
- Innovative thermal management technology intelligently protects power supply lifespan;
- Under normal usage, the lifespan can reach 100,000 hours;
- 5-year warranty (featuring Black Diamond capacitors).

6 in 1 DIM
Triac
ELV
0-10V
1-10V
10V PWM
RX

DIM/CCT

T-PWM
Dimming Technology

Flicker Free
IEEE 1789

Dimmable:
1:10000MAX

NFC

c UL us LISTED (LED Drivers) E497951 Type HL

SELV RoHS Class 2 Class P ErP

0-10V | Traic/ELV | IP67 | T-PWM | Flicker Free IEEE 1789 | Over voltage protection | Short circuit protection | Over Load protection | Overheat Protection

Technical Specs

Model		SW-100-24-U2L		
Features	Output Type	Constant voltage		
	Dimming Interface	Triac/ELV,0-10V(1-10V/10V PWM/RX)		
	Output Feature	Isolation		
	Protection Grade	IP67		
	Insulation Grade	Class I (Suitable for class I/ II /III light fixtures)		
OUTPUT	Output Voltage	24V⎓		
	Max. Output Voltage (No Load)	24V ± 0.5V⎓		
	Output Current	Max. 4.0A		
	Output Power	Max. 96W（75W/100-180V～，96W/200-240V～, 277V～）		
	Output Power Range	0~96W		
	Strobe Level	0~100%，Dimming depth:0.01%~0.1%		
	Overload Power Limitation	Switching ripple ≤120mV，Noise ≤500mV		
	PWM Frequency	300-22000Hz		
INPUT	AC Voltage Range	100-277V ～		
	DC Voltage Range	220-250V⎓ (EMI needs to be evaluated after the lamp is equipped.)		
	Frequency	50/60Hz		
	Input Current	Max. 0.8A/115V～, 0.5A/230V～ , 0.45A/277V~ (at full load)		
	Power Factor	PF>0.95/115V～, PF>0.95/230V～, PF>0.9C/277V~ (at full load)		
	THD	115V～@THD<6%, 230V～@THD<15%, 277V~@THD<25% (at full load)		
	Efficiency (Typ.)	84%/115V～ , 89%/230V～ , 89%/277V~		
	Inrush Current	Cold start 29A(Test twidth=340us tested under 50% Ipeak)/230V～ .		
	Anti Surge	L-N: 6KV L,N-FG: 10KV		
	Leakage Current	Max.0.75mA/277V~		
ENVIRONMENT	Working Temperature	ta: -40 ~ 50°C tc: 80°C		
	Working Humidity	20 ~ 95%RH, non-condensing		
	Storage Temperature/Humidity	-40 ~ 80°C, 10~95%RH		
	Temperature Coefficient	±0.03%/°C(-40 ~ 60°C)		
	Vibration	10~500Hz, 2G 12min/1cycle, 72 min for X, Y and Z axes respectively		
PROTECTION	Overheat Protection	Intelligently adjust or turn off the output current if the PCB temperature ≥110°C, and recover automatically		
	Overload Protection	Automatically protect the device when the load exceeds 102% of the rated power. Automatically recover once load is reduced		
	Short Circuit Protection	Enter hiccup mode if short circuit occurs, and recover automatically		
	Overvoltage Protection	Shut down the output when no-load voltage≥28V, and recover automatically		
SAFETY & EMC	Withstand Voltage	I/P-O/P：3750V～/1min/ < 5mA，I/P-FG：1500V~ /1min/ < 5mA，O/P-FG：500V~ /1min/ < 5mA，signal-FG：500V~ /1min/ < 5mA		
	Insulation Resistance	I/P-O/P：10MΩ/500V～/1min/25°C/70%RH		
	Safety Standards	TUV	Germany	EN61347-1，EN61347-2-13，EN62493
		CB	CB Member States	IEC61347-1，IEC61347-2-13
		CE	European Union	EN61347-1，EN61347-2-13，EN62384
		EAC	Russia	IEC61347-1，IEC61347-2-13
		RCM	Australia	AS 61347-1，AS 61347-2-13
		ENEC	Europe	EN61347-1，EN61347-2-13，EN62384
		UL	America	UL8750，UL1310，Class P
		CUL	Canada	CSA C22.2 No.250.13
		PSE	Japan	J61347-1，J61347-2-13
	EMC Emission	CE	European Union	EN55015，EN61000-3-2，EN61000-3-3，EN61547
		EAC	Russia	IEC62493，IEC61547，EH55015
		RCM	Australia	EN55015，EN61000-3-2，EN61000-3-3，EN61547
		UL	America	FCCpart15B
		CUL	Canada	ICES-005
		PSE	Japan	J55015
ErP	Power Consumption	Networked standby		Standby power consumption without network connection (power consumption is zero when the thyristor signal is zero)
		No-load power consumption		No Idle Mode
	Flicker/Stroboscopic Effect	IEEE1789		Meet IEEE 1789 standard/High frequency exemption level
		CIE SVM		PstLM≤1.0，SVM≤0.4
	DF	Phase factor		DF≥0.9
OTHERS	Weight(N.W.)	850g±10g		
	Dimensions	215×63×35mm(L×W×H)		

Note:
1. When operating above 2000 meters (6500 feet) elevation, the ambient temperature rating for fanless models decreases at a rate of 3.5°C per 1000 meters, while fan-equipped models decrease at a rate of 5°C per 1000 meters.
2. When performing a withstand voltage test on the input to ground (FG), the gas discharge tube located on the input terminal cover of the drive must be temporarily removed to prevent functional operation of the internal gas discharge tube (see IEC 60598-1-10.2). After testing is complete, it must be reinstalled to restore surge protection functionality for the power line to ground and ensure reliable contact.

Product Size

Unit：mm

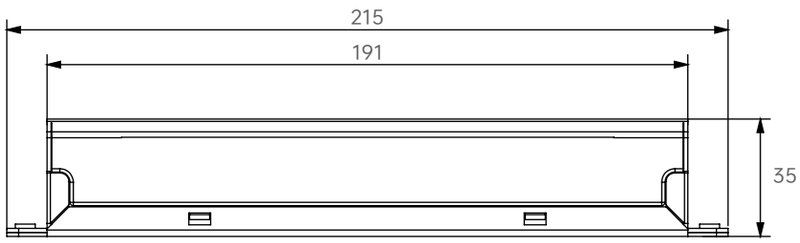

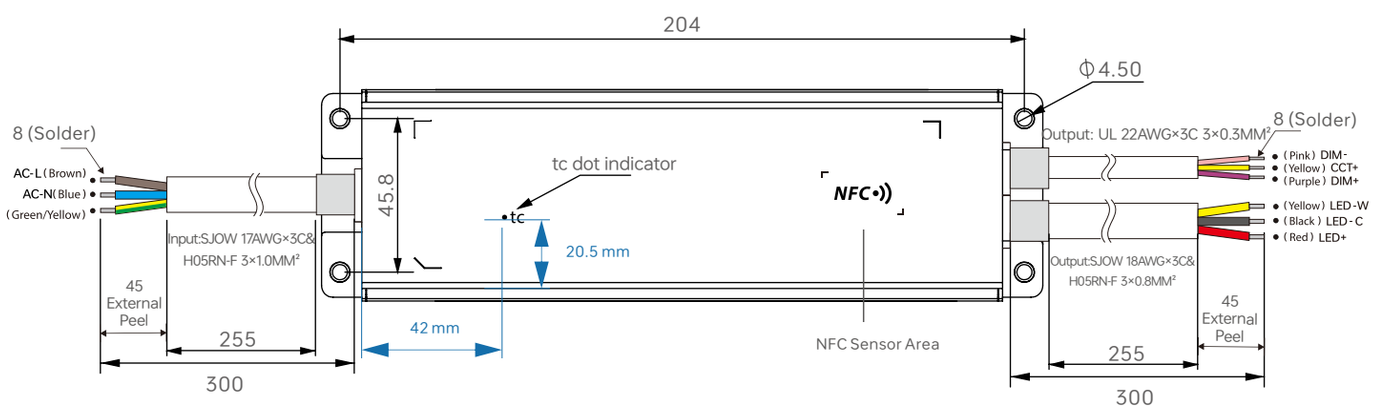

Wiring Diagram

1. Adjust brightness and color temperature separately (via NFC Lighting APP, select dimming mode: Color Temperature - Dual-Channel)

① Connect two AD dimmers

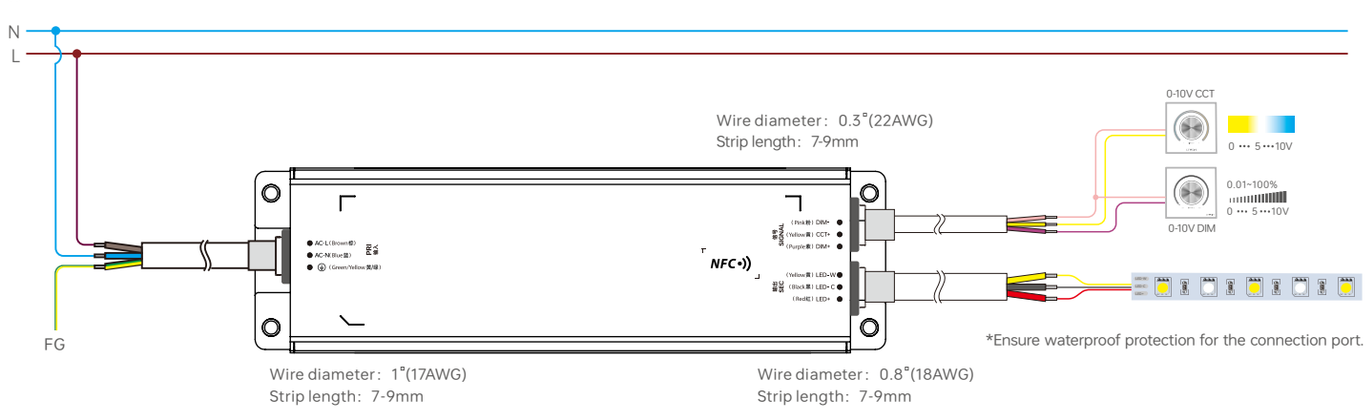

② Connect a Ret AD color temperature dimmer

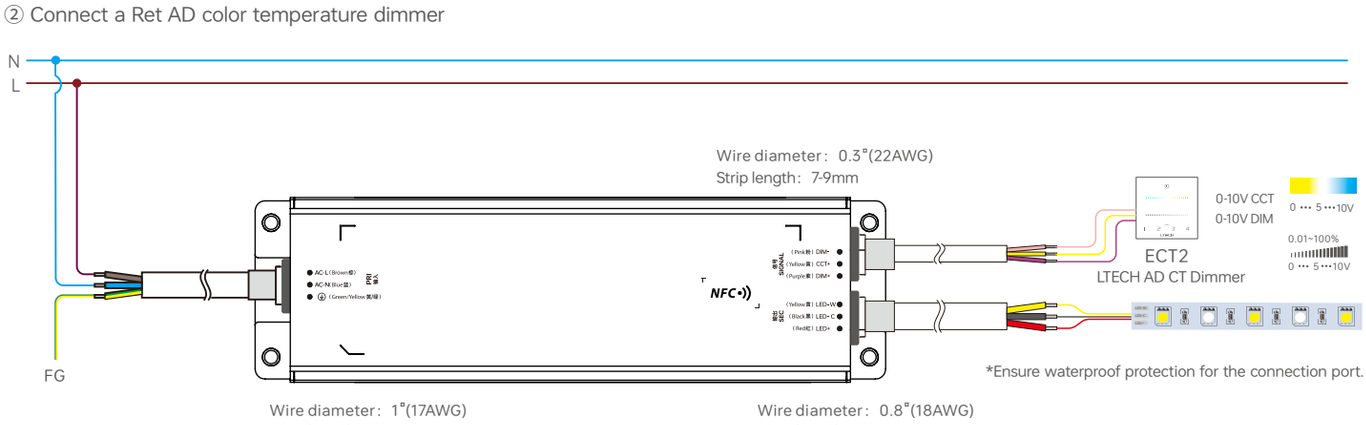

3. Fixed Color Temperature Dimming (Select dimming mode via NFC Lighting APP: Color Temperature - Single Channel, choose fixed color temperature to adjust brightness)

① Connecting a 0-10V dimmer

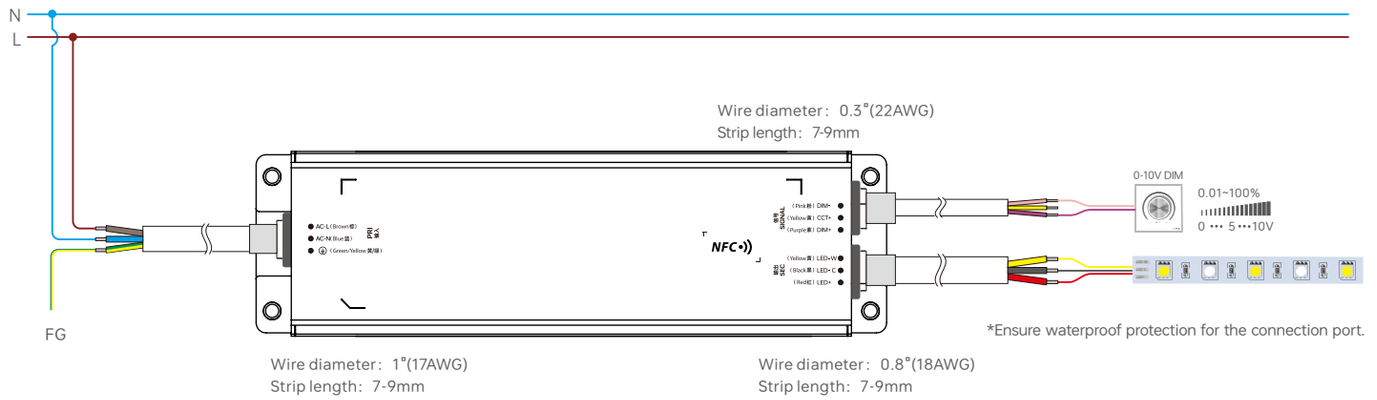

② Connecting a Triac dmmer

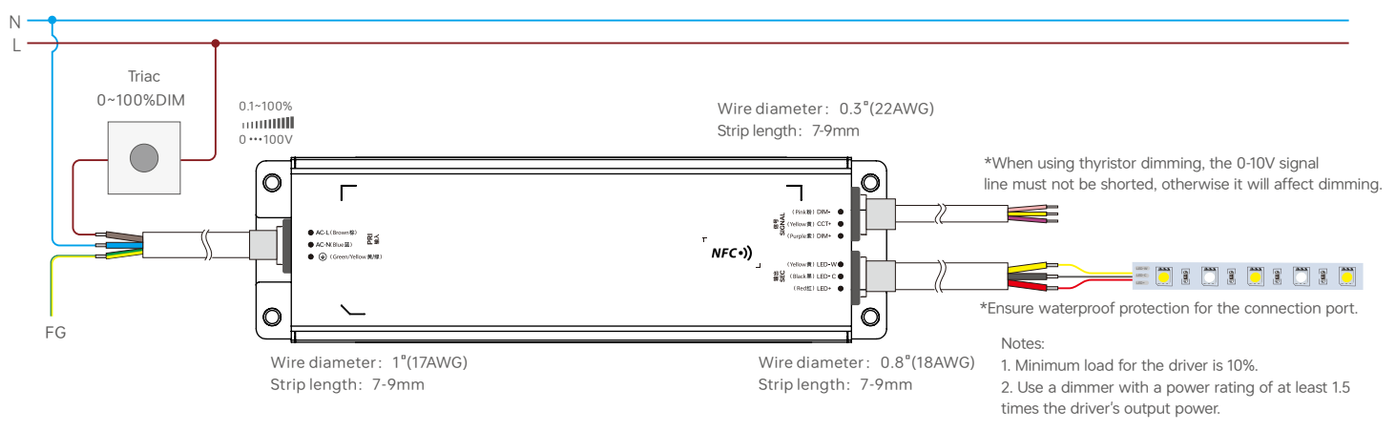

Notes:
1. Minimum load for the driver is 10%.
2. Use a dimmer with a power rating of at least 1.5 times the driver's output power.

③ Connecting a ELV dimmer

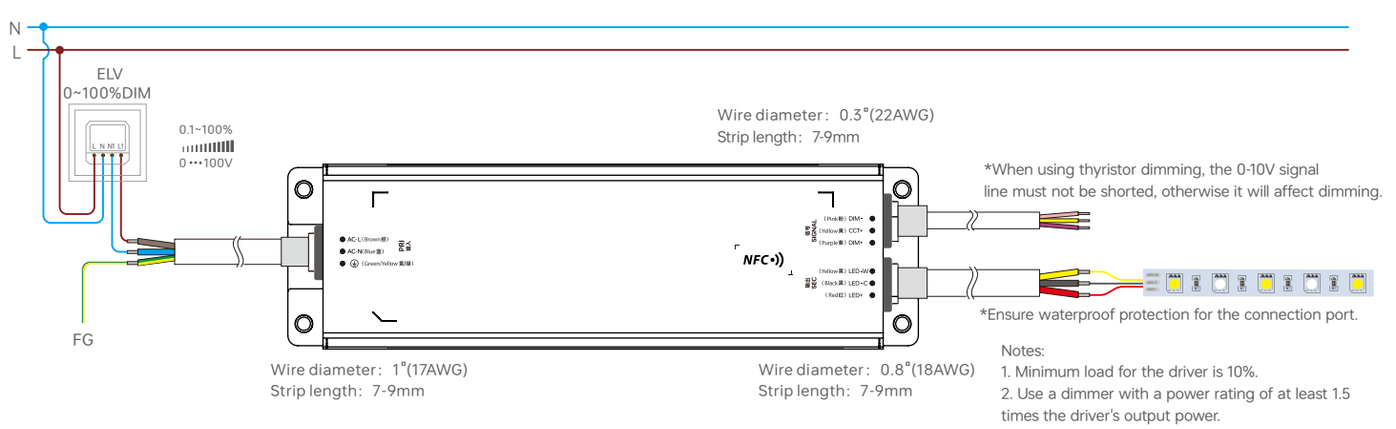

Notes:
1. Minimum load for the driver is 10%.
2. Use a dimmer with a power rating of at least 1.5 times the driver's output power.

4. Simultaneous brightness and color temperature adjustment (via NFC Lighting APP select dimming mode: Color Temperature - Single Channel, brighter for whiter light, dimmer for warmer light)

①Connecting 0-10V dimmer

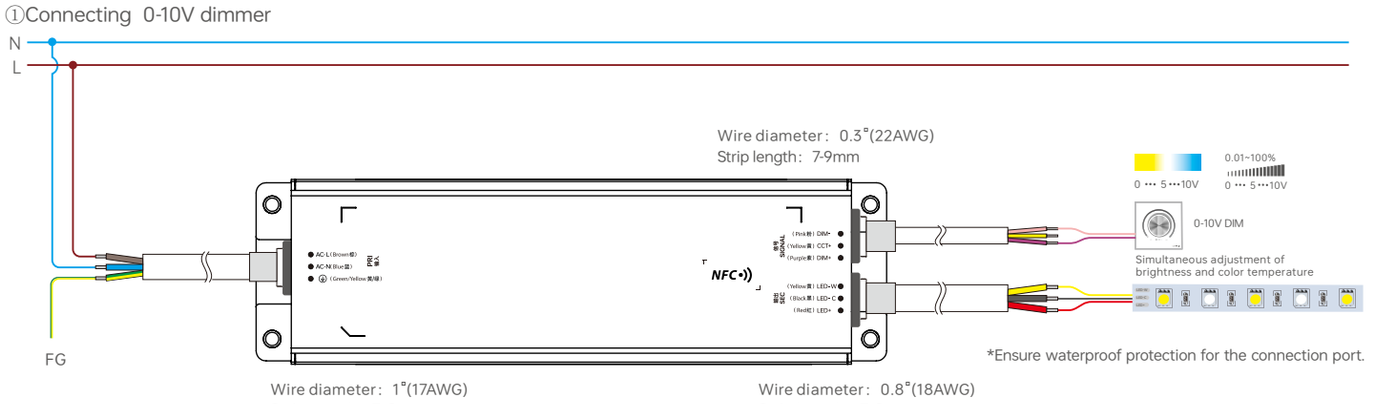

② Connecting a Triac dmmer

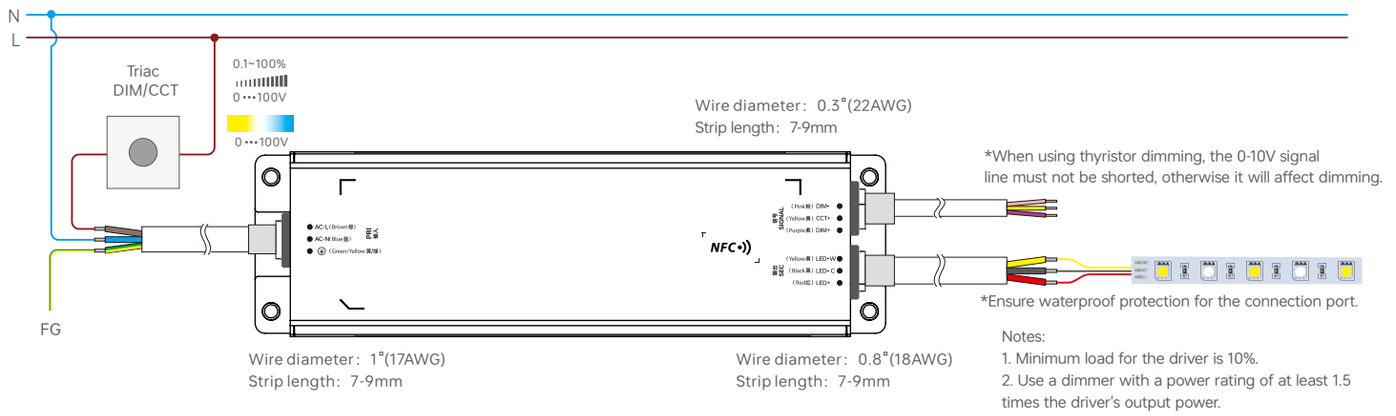

Notes:
1. Minimum load for the driver is 10%.
2. Use a dimmer with a power rating of at least 1.5 times the driver's output power.

③ Connecting a ELV dmmer

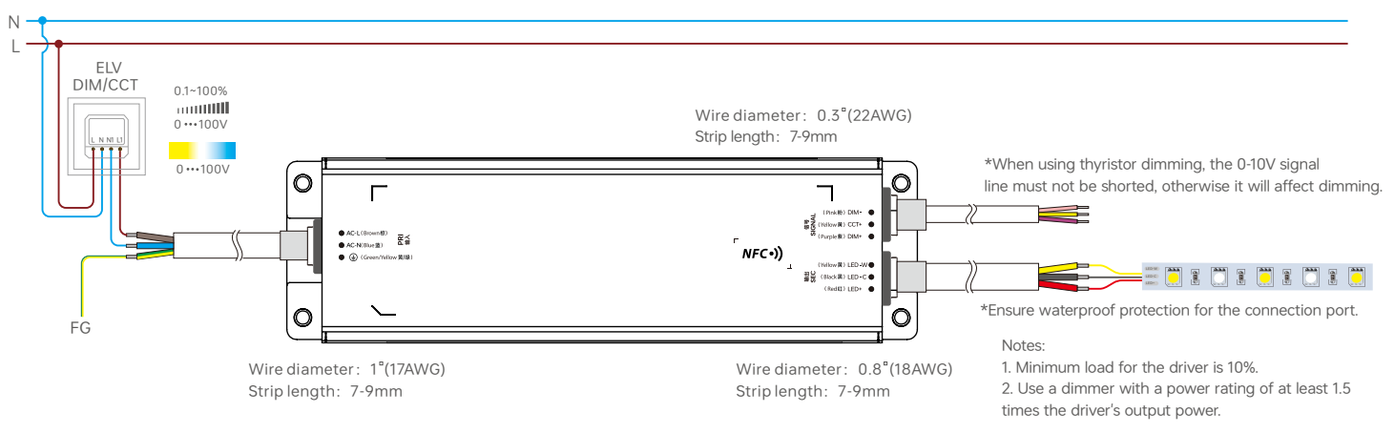

Notes:
1. Minimum load for the driver is 10%.
2. Use a dimmer with a power rating of at least 1.5 times the driver's output power.

5. Single-lamp brightness adjustment (Select dimming mode via NFC Lighting APP: Dimming - Single-circuit Single-lamp)

① Connecting a 0-10V dmmer

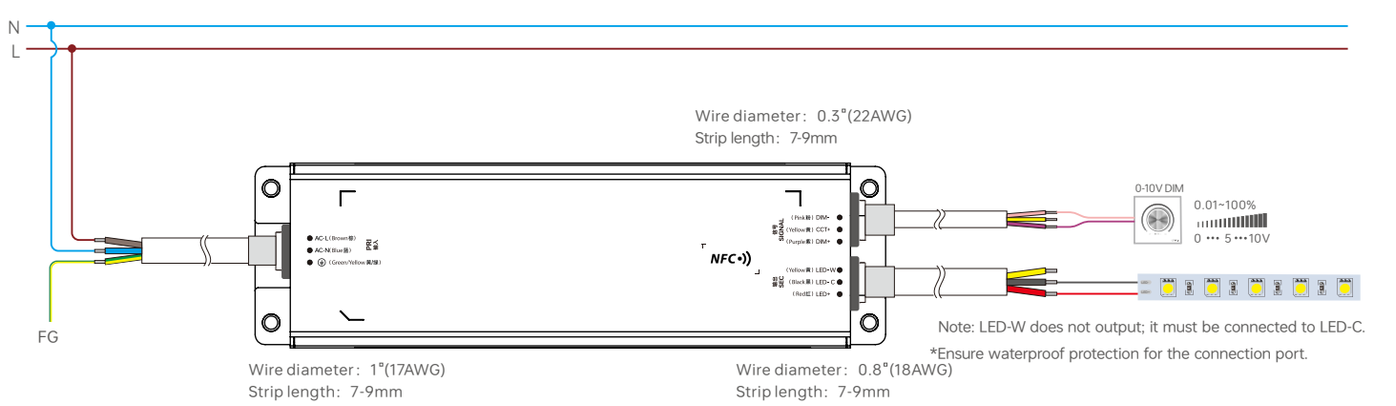

② Connecting a Triac dmmer

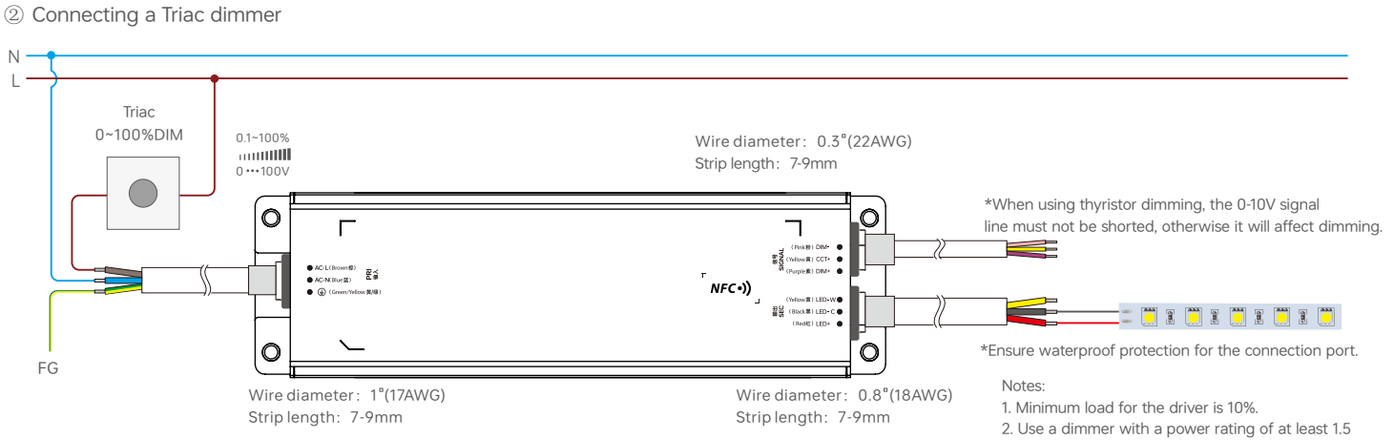

Notes:
1. Minimum load for the driver is 10%.
2. Use a dimmer with a power rating of at least 1.5 times the driver's output power.

③ Connecting a ELV dimmer

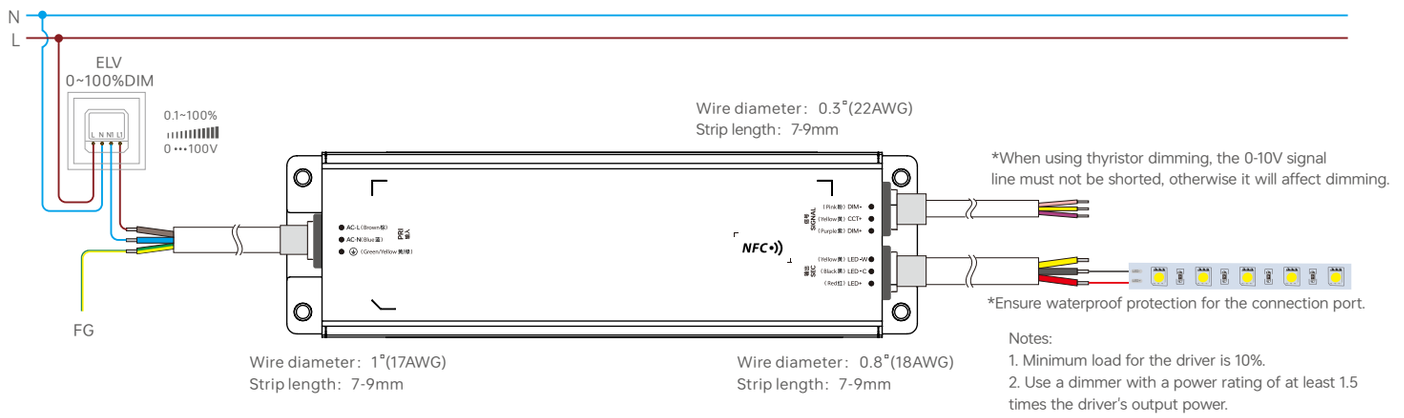

Notes:
1. Minimum load for the driver is 10%.
2. Use a dimmer with a power rating of at least 1.5 times the driver's output power.

6. Dual-Light Brightness Adjustment (Select dimming mode via NFC Lighting APP: Dimming - Single-Circuit Dual Lights)

① Connecting a 0-10V dimmer

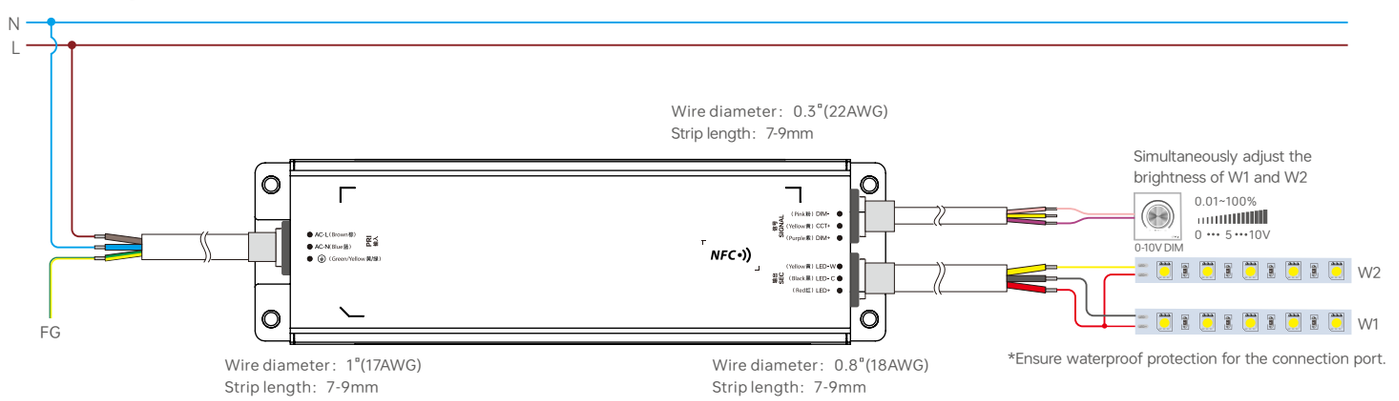

② Connecting a Triac dmmer

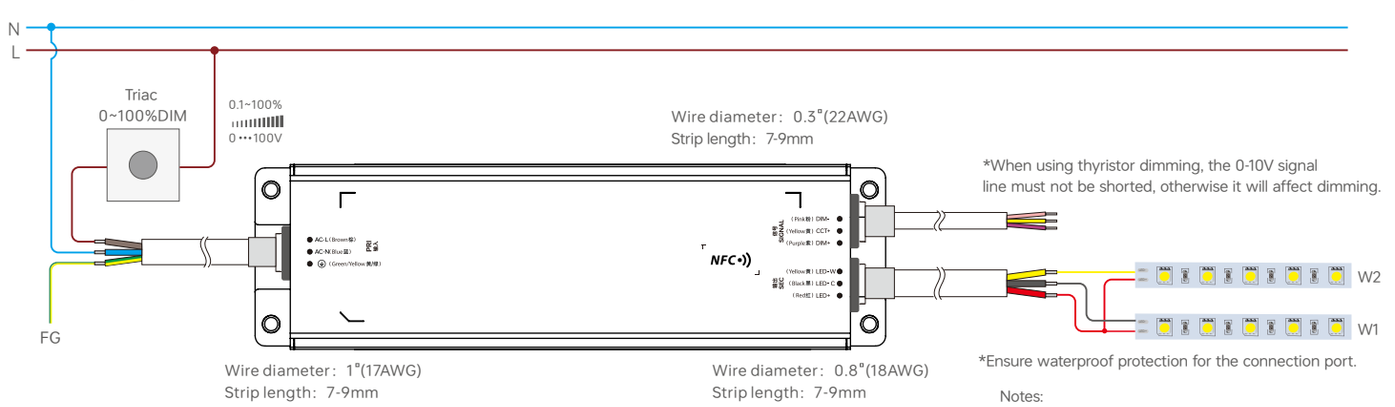

Notes:
1. Minimum load for the driver is 10%.
2. Use a dimmer with a power rating of at least 1.5 times the driver's output power.

③ Connecting a ELV dmmer

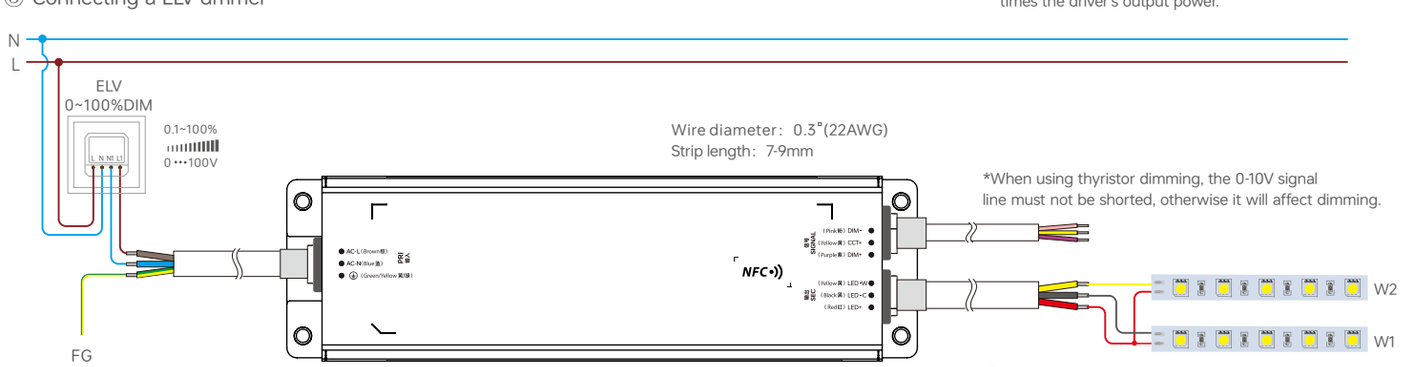

Notes:
1. Minimum load for the driver is 10%.
2. Use a dimmer with a power rating of at least 1.5 times the driver's output power.

7. Dual-Light Brightness Adjustment (Select dimming mode via NFC Lighting APP: Dimming - Dual-Light Dual-Circuit)

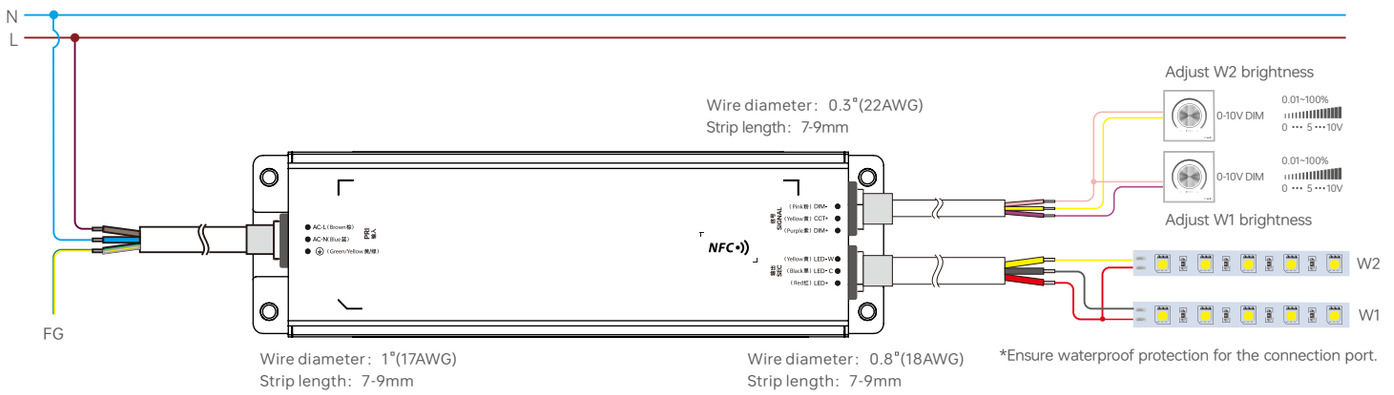

Recommended Controllable Silicon Adapter Dimmer

Manufacturer	LUTRON	LUTRON	LUTRON	LUTRON	MAXXIMA	LEGRAND	LEGRAND
Model	DNG-600P	MACL-153M	DVCL-253P	SCL-153P-WH	DM620	WSCL450W	LS600

* The above list contains recommended dimmers for thyristor testing. Unlisted thyristor dimmers must be verified through actual testing to ensure no abnormalities before use. 0-10V dimmers exhibit no compatibility issues.

Installation Precautions

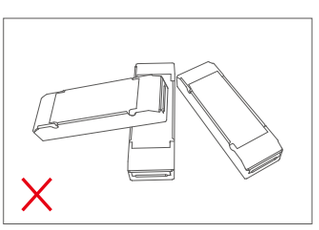

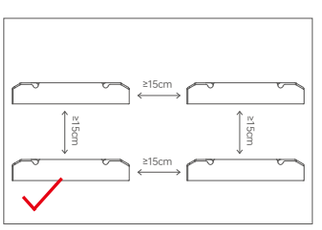

Please do not stack the products. The distance between two products should be ≥15cm so as not to affect heat dissipation or the lifetime of the products.

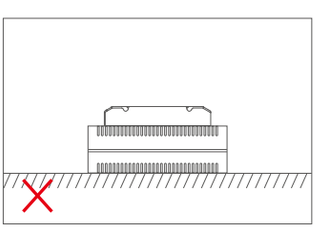

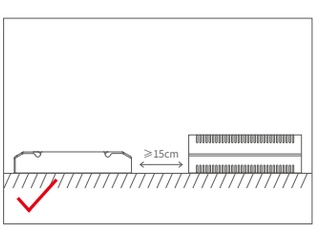

Please not place the products on power supplies. The distance between the product and the power supplies should be ≥15cm so as not to aśect heat dissipation or shorten the lifetime of the products.

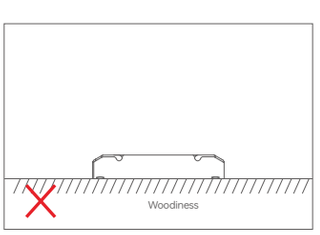

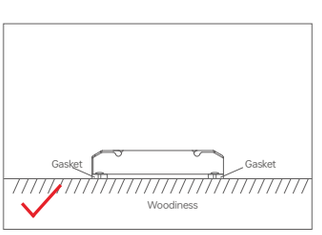

Do not fix the product screws tightly against the wooden board. Instead, add a washer with a thickness of ≥ 7mm under the fixing screws. Leaving some gaps can effectively dissipate heat, preventing any impact on the product's heat dissipation performance and service life.

Use the NFC Lighting APP

Scan the QR code below with your mobile phone and follow the prompts to complete the APP installation (According to performance requirements, you need to use a NFC-capable Android phone, or an iphone 8 and later that are compatible with iOS 13 or higher).

* Before you begin setting the parameters of the driver, please make sure the driver is powered off.

Read/Write the LED driver

Use your NFC-capable phone to read LED driver data, then edit the parameters and they can be directly written to the driver.

1.Read the LED driver

On the APP home page, click【Read/Write LED driver】, then keep the programmer's sensing area close to the NFC sensing area of the driver to read the driver parameters.

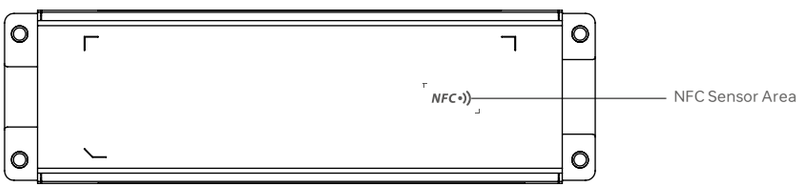

2. Edit parameters

Click on [Parameter Management] to edit more advanced parameters such as Dimming Type, PWM frequency, Power-on dimming time, Turn-on calibration,and 0-10V interface mode.

3. Write to the drive

After completing the parameter settings, click 【Write】in the upper right corner, and keep the programmer's sensing area close to the NFC sensing area of the driver, so the parameters can be written to the driver.

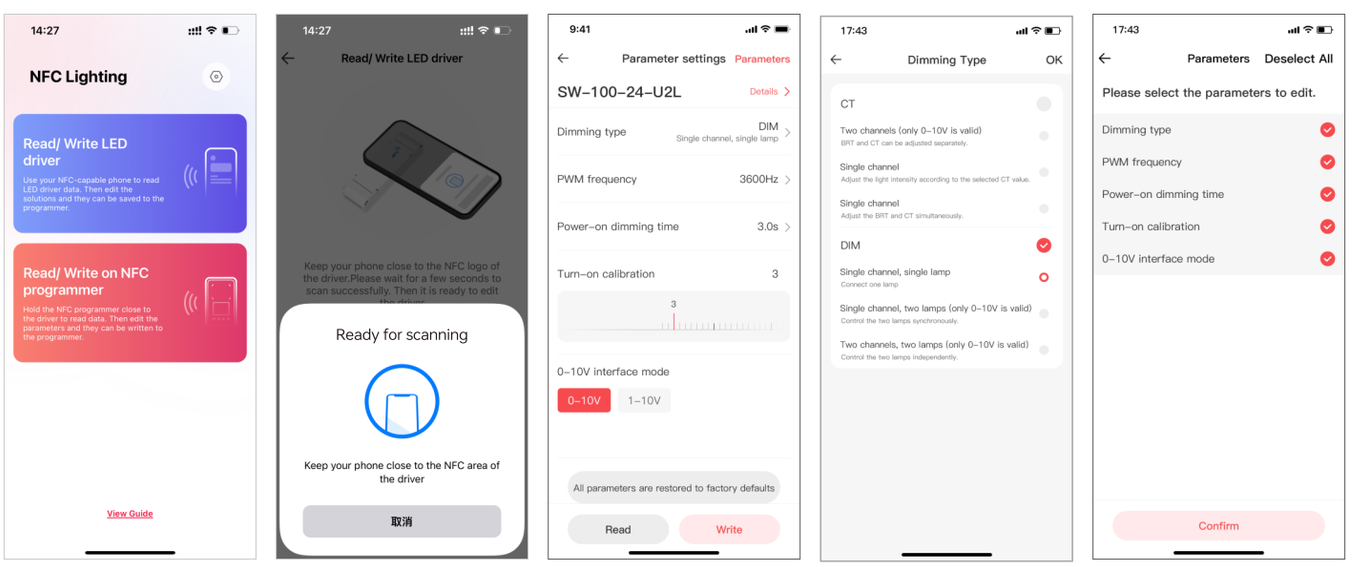

Relationship Diagrams

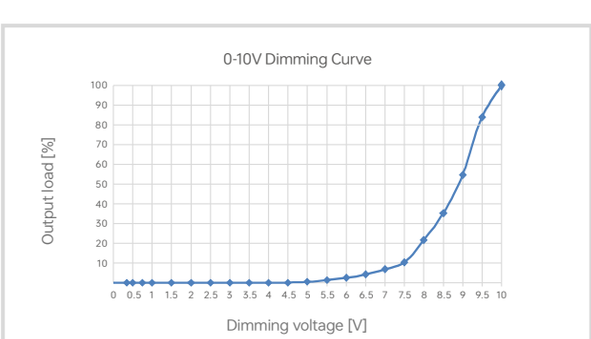

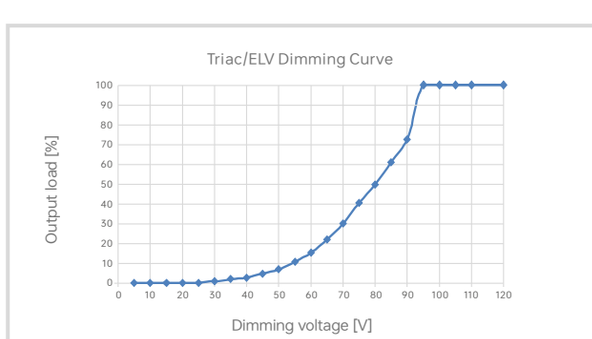

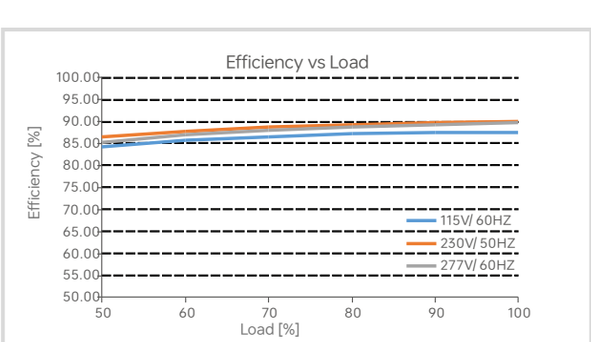

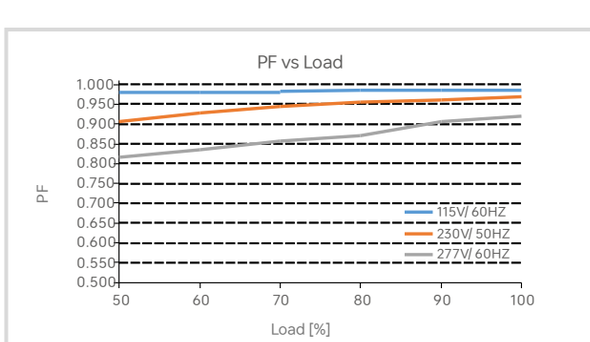

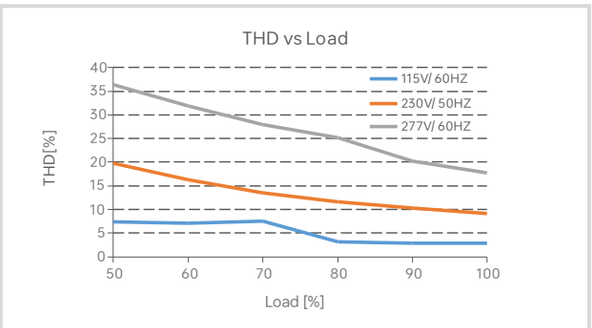

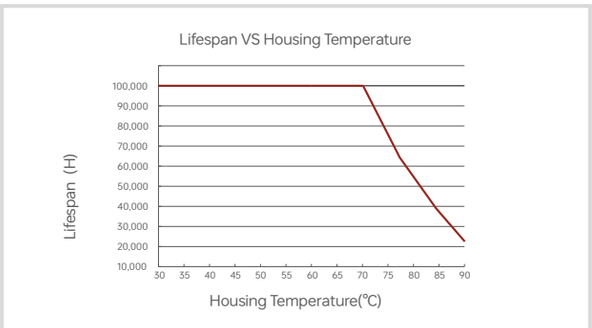

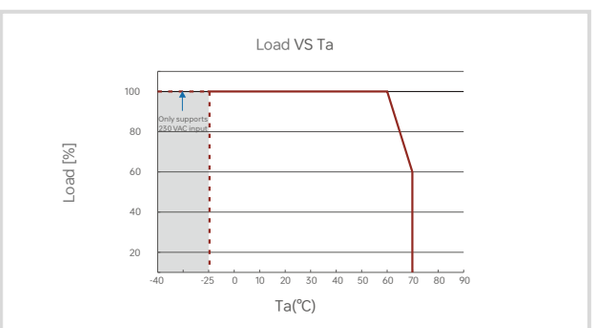

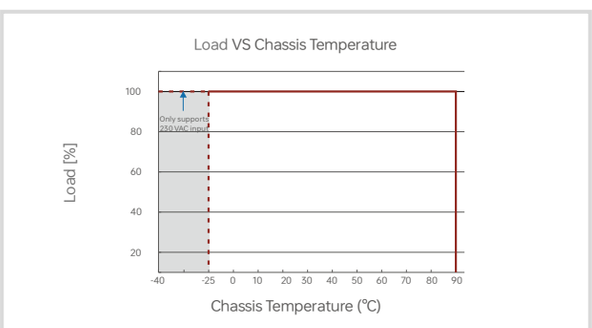

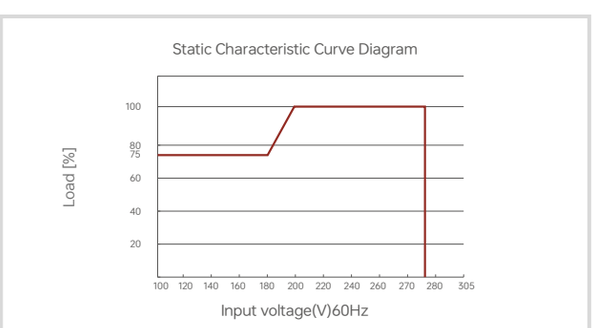

Surge Current & Corresponding Miniature Circuit Breaker (MCB) Load Capacity Table

MCB Model	B10	B13	B16	B20	B25	C10	C13	C16	C20	C25	D10	D13	D16	D20	D25
Maximum Load Capacity	20	26	32	40	50	23	30	37	47	58	27	34	42	53	66

Remarks:

1. Test Conditions: Cold start 29A(Test twidth=340us tested under 50% Ipeak)/230V ~ .
2. The number of supported drivers may vary depending on the brand and model of the MCB.
3. It is recommended not to exceed the specified load capacity during on-site installation. The actual load should be determined based on field conditions.
4. If the ambient temperature exceeds 30°C or multiple MCBs are installed side by side, the number of installed drivers must be reduced and recalculated accordingly.
5. Electricians typically use Type B MCBs for residential lighting and Type C MCBs for commercial lighting applications.
6. Different testing equipment may yield variations in measured current peaks and pulse widths. Always use professional-grade instruments for accurate testing.

Flicker Test Table

IEEE 1789

Limit Value of Modulation in Low Risk Areas	
Waveform frequency of Optical output (f)	Limit value (%)
f ≤ 8Hz	0.2
8Hz < f ≤ 90Hz	0.025 × f
90Hz < f ≤ 1250Hz	0.08 × f
f > 1250Hz	Exemption assessment
Limit Value of Modulation in No Effect Areas	
Waveform frequency of Optical output (f)	Limit value (%)
f ≤ 10Hz	0.1
10Hz < f ≤ 90Hz	0.01 × f
90Hz < f ≤ 3125Hz	(0.08/2.5) × f
f > 3125Hz	Exemption assessment (High frequency exemption)

Brightness

- 0.1%
- 1%
- 5%
- 10%
- 20%
- 30%
- 40%
- 50%
- 60%
- 70%
- 80%
- 90%
- 100%

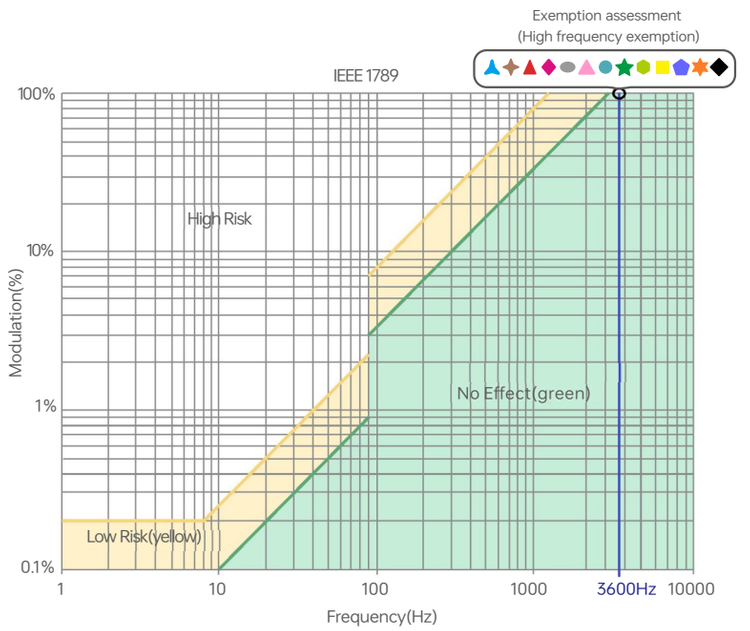

Packaging Specifications

Model	SW-100-24-U2L
Packaging Box Dimensions	261×93×45mm (L×W×H)

Packaging Image

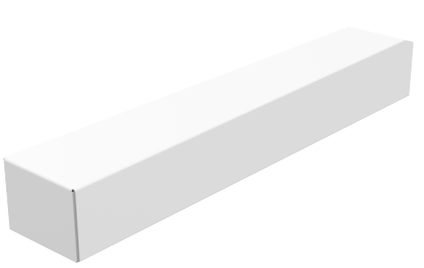

Inner Packaging Box

Transportation and Storage

1. Transportation

Products can be shipped via vehicles, boats and planes.

During transportation, products should be protected from rain and sun. Please avoid severe shock and vibration during the loading and unloading process.

2. Storage

The storage conditions should comply with the Class I Environmental Standards. The products that have been stored for more than six months are recommended to be re-inspected and can be used only after they have been qualified.

Attentions

- Products shall be installed by qualified professionals.
- LTECH products are and not lightningproof non-waterproof (special models excepted). Please avoid the sun and rain. When installed outdoors, please ensure they are mounted in a water proof enclosure or in an area equipped with lightning protection devices.
- Good heat dissipation will prolong the working life of products. Please ensure good ventilation.
- Please check if the working voltage used complies with the parameter requirements of products.
- The diameter of wire used must be able to load the light fixtures you connect and ensure the firm wiring.
- Before you power on products, please make sure all the wiring is correct in case of incorrect connection that causes damage to light fixtures.
- If a fault occurs, please do not attempt to fix products by yourself. If you have any question, please contact your suppliers.

✻ This manual is subject to changes without further notice. Product functions depend on the goods. Please feel free to contact our official distributors if you have any question.

Warranty Agreement

- Warranty periods from the date of delivery: 5 years.
- Free repair or replacement services for quality problems are provided within warranty periods.

Warranty exclusions below:

- Beyond warranty periods.
- Any artificial damage caused by high voltage, overload, or improper operations.
- Products with severe physical damage.
- Damage caused by natural disasters and force majeure.
- Warranty labels and barcodes have been damaged.
- No any contract signed by LTECH.

1. Repair or replacement provided is the only remedy for customers. LTECH is not liable for any incidental or consequential damage unless it is within the law.
2. LTECH has the right to amend or adjust the terms of this warranty, and release in written form shall prevail.

Update Log

Version	Updated Time	Update Conten	Updated by
A0	20260227	Original version	Haipeng Li